AT
BE
BT
CH
DE
ES
FR
GB
IT
NL
PL
RU
SE
SI

# Diagram / Parts List

## WUT02

## WIRELESS UNIT ADAPTOR

2019/08

# (PL) WUT02 / WIRELESS UNIT ADAPTOR

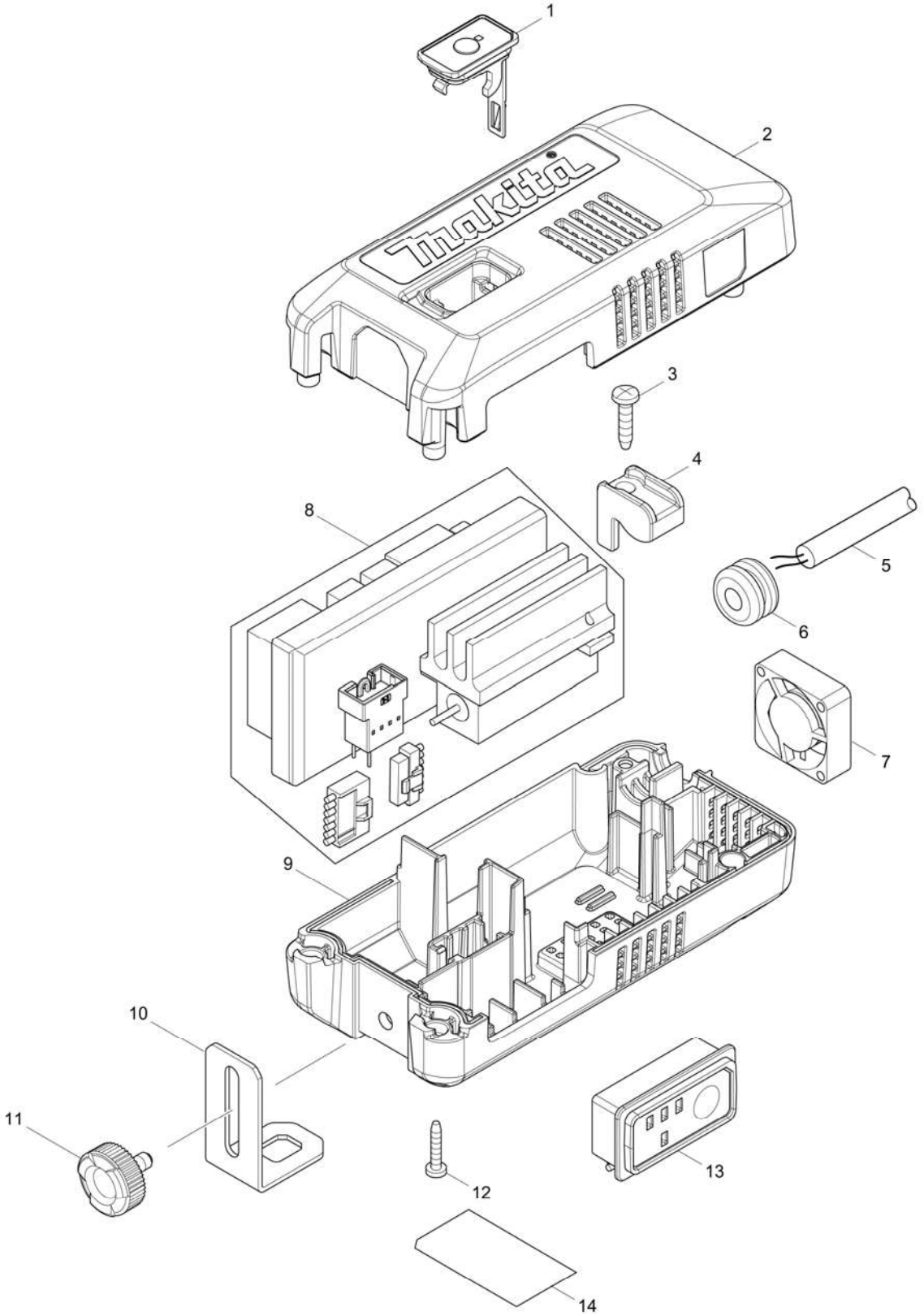

| PL | POLAND |
|---|---|

## WUT02 / WIRELESS UNIT ADAPTOR

| Item | Sub | Parts No. | Parts Description | Qty | I/C | E/C No. | Close No. | Remark |
|---|---|---|---|---|---|---|---|---|
| 001 | | 140G30-2 | CAP COMPLETE | 1 | | | | |
| | C10 | 213218-6 | O RING 16 | 1 | | | | |
| | C20 | 818H48-4 | CAP LABEL | 1 | | | | |
| 002 | | 140J51-2 | UPPER HOUSING COMPLETE | 1 | | | | |
| | C10 | 818W22-2 | CAUTION LABEL | 1 | | | | |
| 003 | | 266326-2 | TAPPING SCREW 4X18 | 1 | | | | |
| 004 | | 687260-7 | STRAIN RELIEF | 1 | | | | |
| 005 | | 695036-8 | POWER SUPPLY CORD 1.0-2-0.9 | 1 | | | | |
| 006 | | 682577-3 | GROMMET | 1 | | | | |
| 007 | | 620A49-6 | FAN CIRCUIT | 1 | | | | |
| 008 | | 632N35-3 | CONTROLLER UNIT | 1 | | | | |
| 009 | | 459078-4 | LOWER HOUSING | 1 | | | | |
| 010 | | 347491-7 | HOOK | 1 | | | | |
| 011 | | 265785-7 | THUMB SCREW M5X10 | 1 | | | | |
| 012 | | 266130-9 | TAPPING SCREW BIND PT 3X16 | 4 | | | | |
| 013 | | 140J75-8 | INDICATOR CIRCUIT COMPLETE | 1 | | | | |
| | C10 | 818W21-4 | SWITCH LABEL | 1 | | | | |
| 014 | | 855L64-9 | WUT02 NAME PLATE | 1 | | | | |
| A01 | | 162565-1 | BAND | 1 | | | | |
| A02B | | 198900-7 | WIRELESS UNIT SET | 1 | | | | |

B:

Interchange
O : Yes
X : No
< : the new part can be substituted for the current.
> : the current part can be substituted for the new.
S : Interchangeable as a set.